Installation Instructions

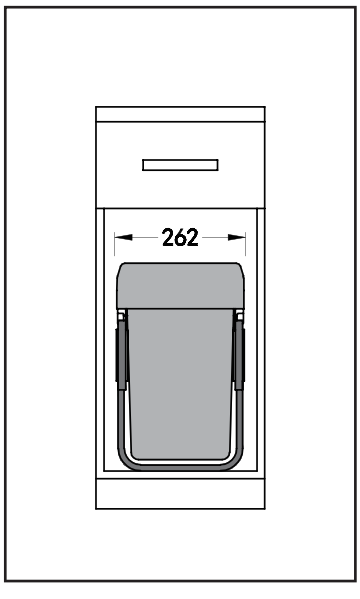

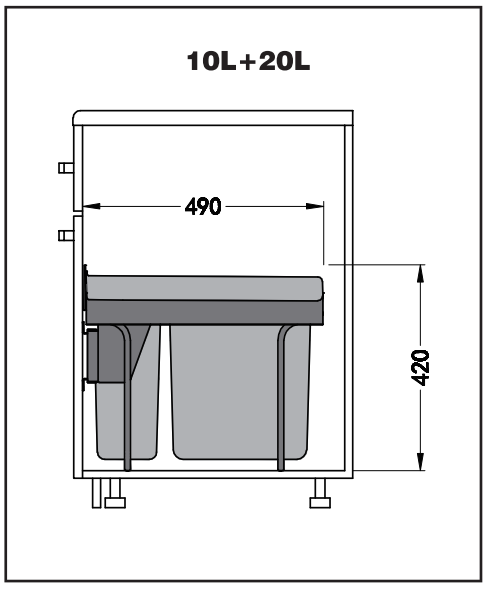

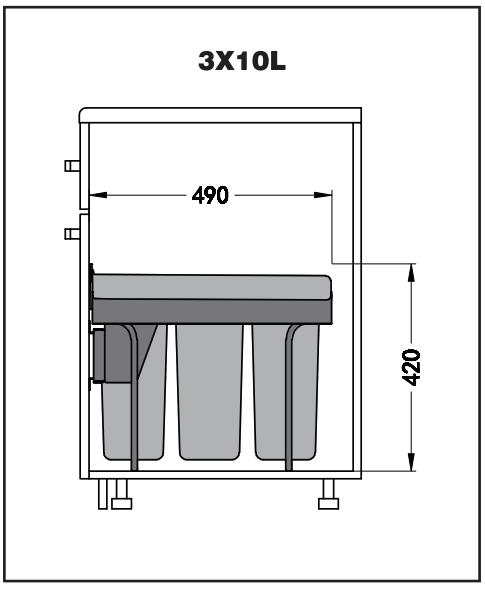

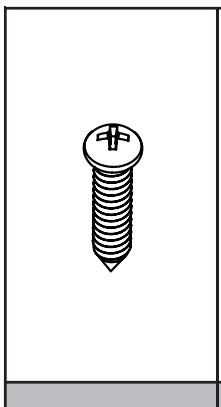

16 X Short Screws

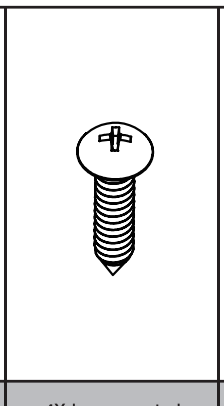

4Xdoor mounted screws

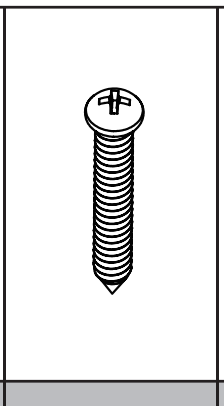

6 X long screws

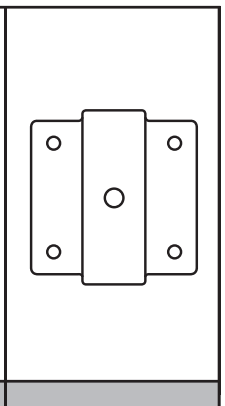

4 X metal brackets

1

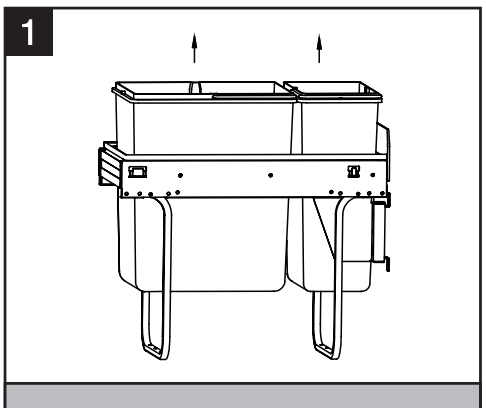

Take out the buckets before installation

2

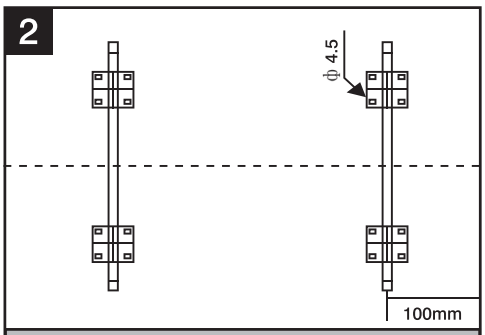

Center the metal frame in the cabinet correctly

3

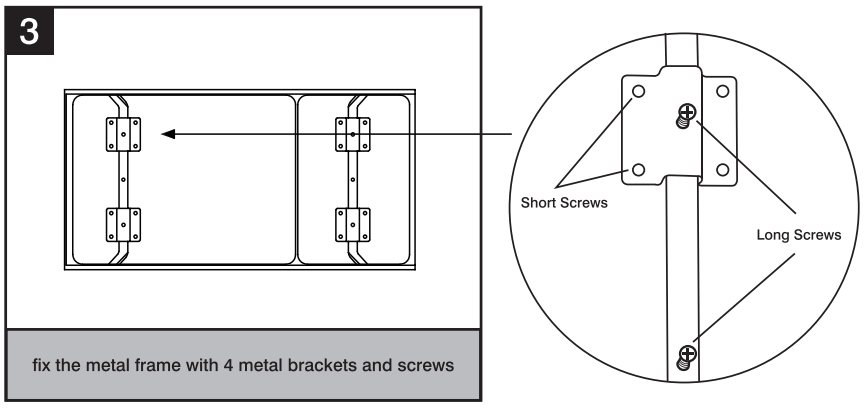

fix the metal frame with 4 metal brackets and screws

4

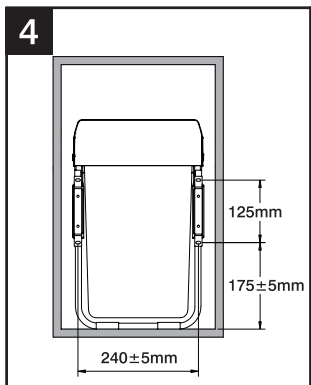

door mounted sizes details

5

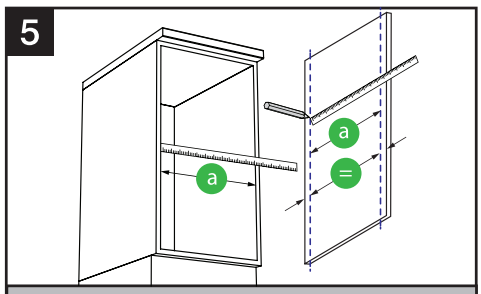

1)Measure internal width of cabinet and make on the door panel
2)Door mounted fittings position =(a-240)/2 and also refer to step 4 (height distance info.)

6

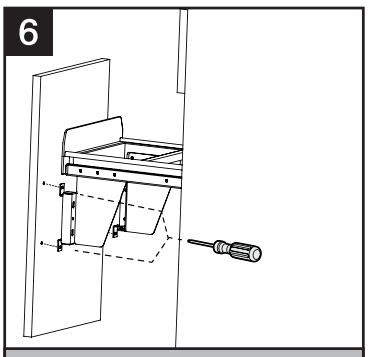

Assembly the bin frame to door panel with screws

7

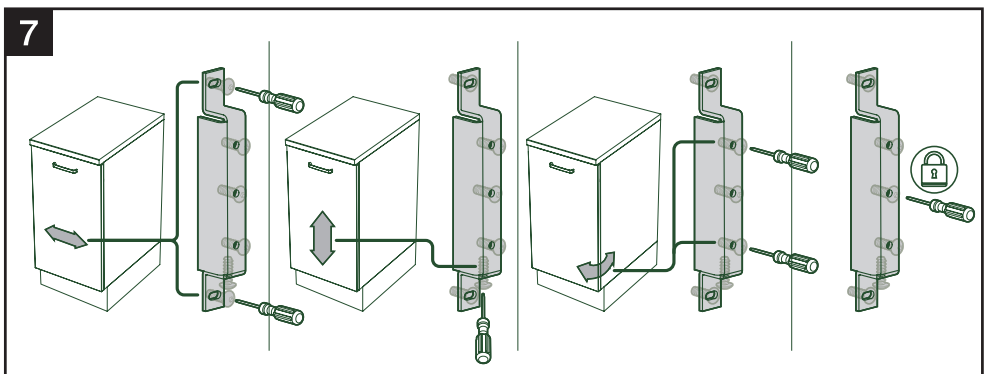

Adjust horizontal | Adjust vertical | Adjust forward/backward | Lock adjustments

8

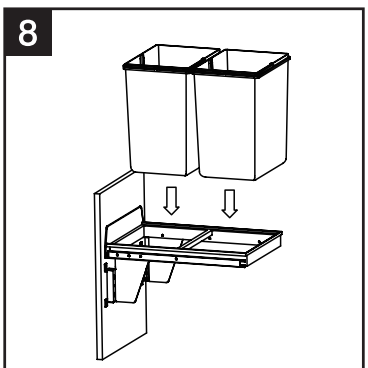

Insert Bins&cover